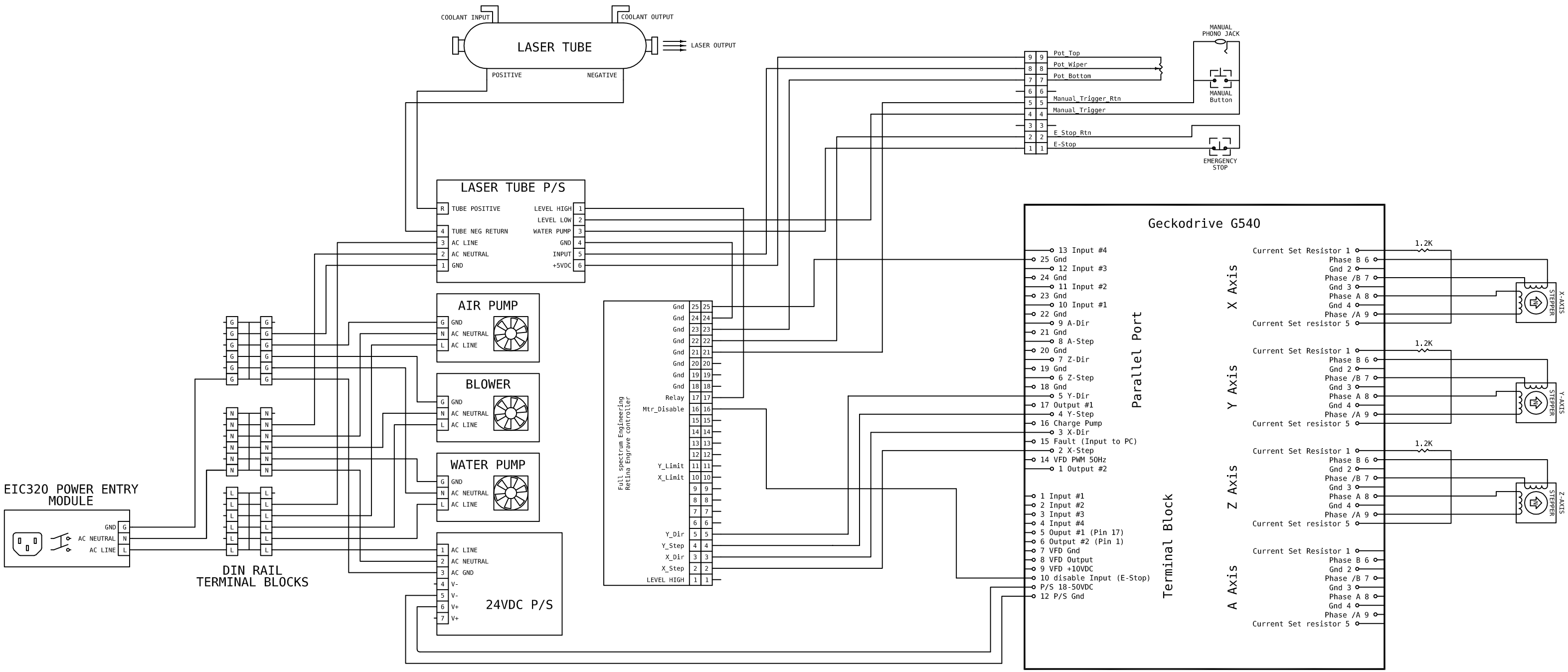
COOLANT INPUT
COOLANT OUTPUT
LASER TUBE
LASER OUTPUT
POSITIVE
NEGATIVE
LASER TUBE P/S
R TUBE POSITIVE
4 TUBE NEG RETURN
3 AC LINE
2 AC NEUTRAL
1 GND
LEVEL HIGH 1
LEVEL LOW 2
WATER PUMP 3
GND 4
INPUT 5
+5VDC 6
AIR PUMP
G GND
N AC NEUTRAL
L AC LINE
BLOWER
G GND
N AC NEUTRAL
L AC LINE
WATER PUMP
G GND
N AC NEUTRAL
L AC LINE
EIC320 POWER ENTRY MODULE
GND G
AC NEUTRAL N
AC LINE L
DIN RAIL TERMINAL BLOCKS
1 AC LINE
2 AC NEUTRAL
3 AC GND
4 V-
5 V-
6 V+
7 V+
24VDC P/S
Full spectrum Engineering Retina Engrave controller
Gnd 25 25
Gnd 24 24
Gnd 23 23
Gnd 22 22
Gnd 21 21
Gnd 20 20
Gnd 19 19
Gnd 18 18
Relay 17 17
Mtr_Disable 16 16
15 15
14 14
13 13
12 12
Y_Limit 11 11
X_Limit 10 10
9 9
8 8
7 7
6 6
Y_Dir 5 5
Y_Step 4 4
X_Dir 3 3
X_Step 2 2
LEVEL HIGH 1 1
9 9 Pot_Top
8 8 Pot_Wiper
7 7 Pot_Bottom
6 6
5 5 Manual_Trigger_Rtn
4 4 Manual_Trigger
3 3
2 2 E_Stop_Rtn
1 1 E-Stop
MANUAL PHONO JACK
MANUAL Button
EMERGENCY STOP
Geckodrive G540
13 Input #4
25 Gnd
12 Input #3
24 Gnd
11 Input #2
23 Gnd
10 Input #1
22 Gnd
9 A-Dir
21 Gnd
8 A-Step
20 Gnd
7 Z-Dir
19 Gnd
6 Z-Step
18 Gnd
5 Y-Dir
17 Output #1
4 Y-Step
16 Charge Pump
3 X-Dir
15 Fault (Input to PC)
2 X-Step
14 VFD PWM 50Hz
1 Output #2
Parallel Port
1 Input #1
2 Input #2
3 Input #3
4 Input #4
5 Ouput #1 (Pin 17)
6 Output #2 (Pin 1)
7 VFD Gnd
8 VFD Output
9 VFD +10VDC
10 disable Input (E-Stop)
P/S 18-50VDC
12 P/S Gnd
Terminal Block
X Axis
Y Axis
Z Axis
A Axis
Current Set Resistor 1
Phase B 6
Gnd 2
Phase /B 7
Gnd 3
Phase A 8
Gnd 4
Phase /A 9
Current Set resistor 5
1.2K
STEPPER
X-AXIS
Y-AXIS
Z-AXIS