REVISIONS			
SYM	DESCRIPTION	BY	DATE
1	ORIGINAL	BJD	12/2/10
2	Changed I.D.	BJD	12/3/10

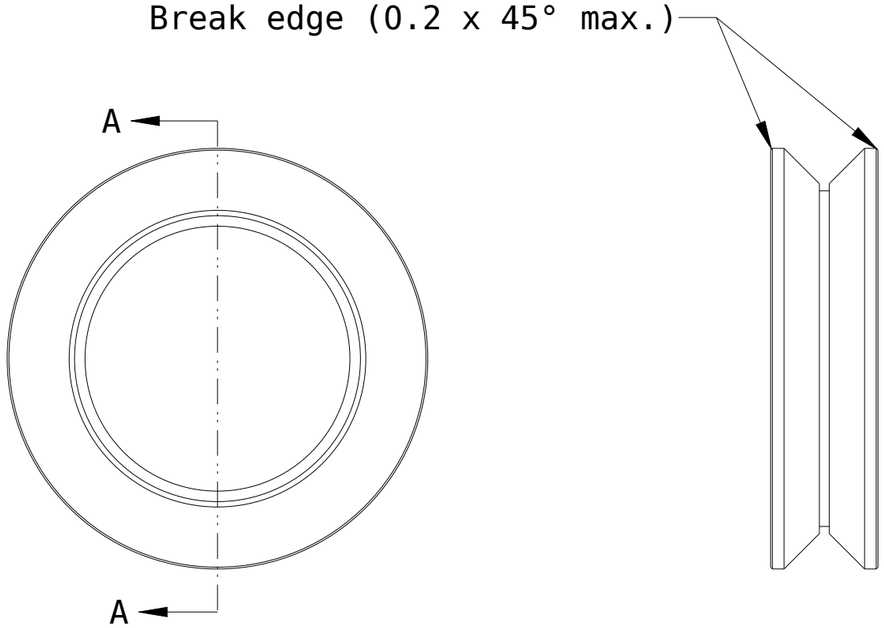

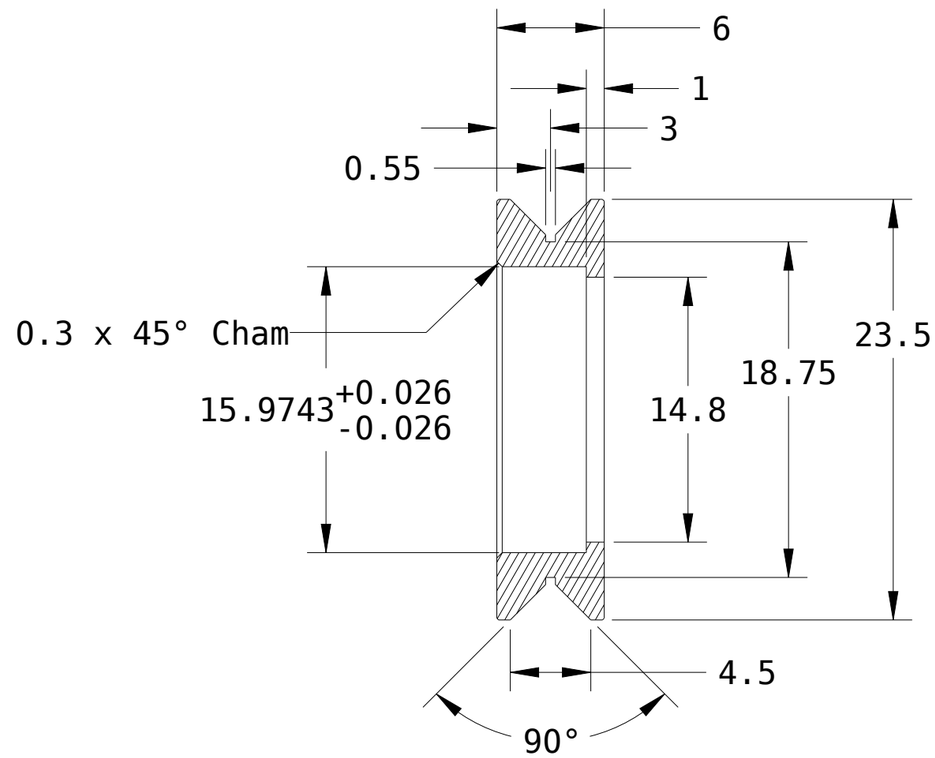

All dimensions in millimeters.

SECTION A-A

The work is licensed under a Creative Commons Attribute-Share Alike 3.0 License

DRAWN	BJD	12/02/10
CHECKER		
MECH. ENGR.		
ELEC. ENGR.		
PROJ. ENGR.		
CHIEF ENGR.		

V Bearing Wheel

www.buildlog.net

B17001-001

SCALE

SHEET 1 OF 1